ACCEPTED BY

TYPICAL SECONDARY STREET CROSS SECTION CURB & GUTTER

BOONE COUNTY HIGHWAY DEPARTMENT

STANDARD PLAN NO. TC-6 SHEET 1 OF 1

(3)

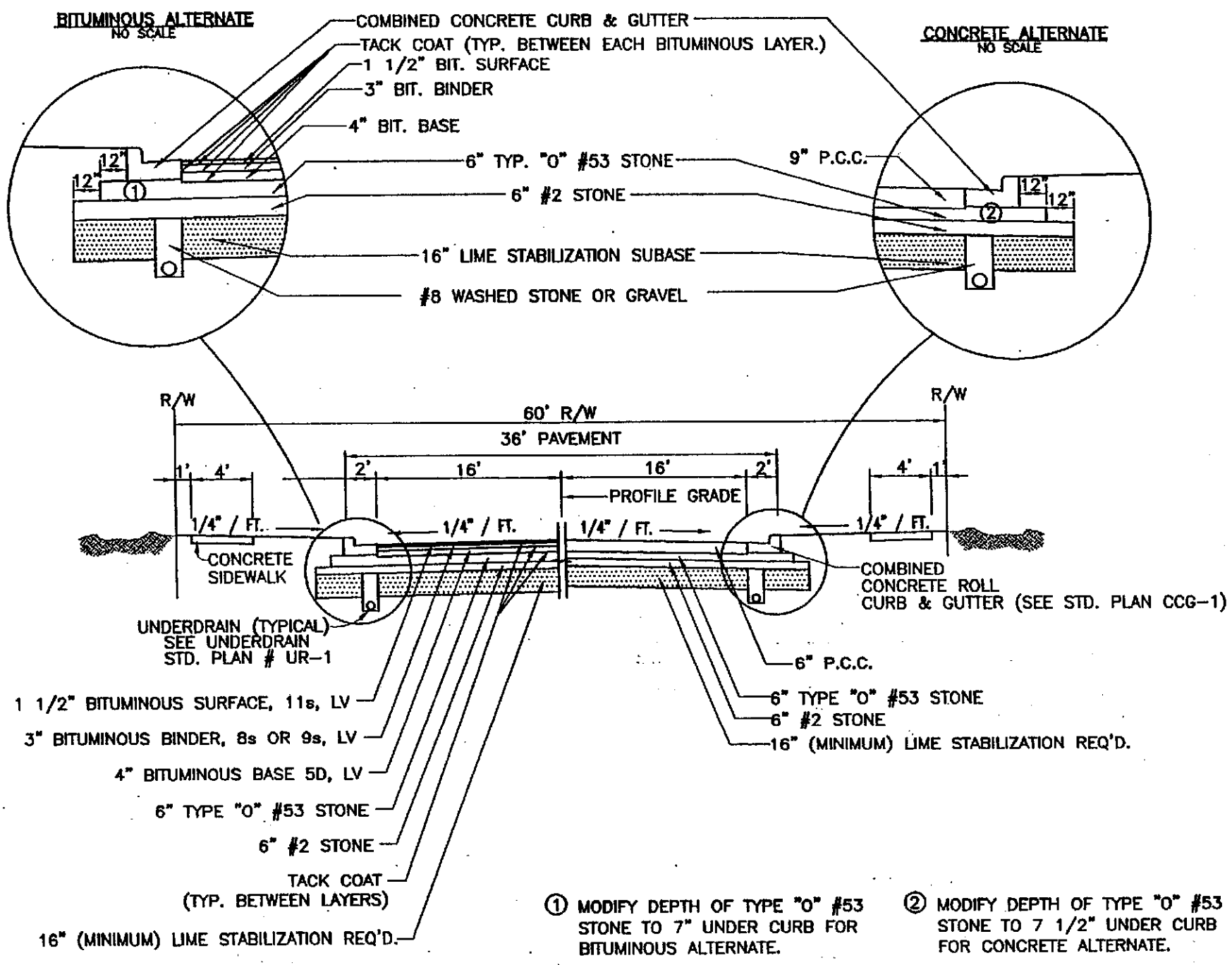

① MODIFY DEPTH OF TYPE "O" #53 STONE TO 7" UNDER CURB FOR BITUMINOUS ALTERNATE.

② MODIFY DEPTH OF TYPE "O" #53 STONE TO 7 1/2" UNDER CURB FOR CONCRETE ALTERNATE.

NOTE: USE WITH INDIANA DEPARTMENT OF TRANSPORTATION, LATEST EDITION, STANDARD SPECIFICATIONS

SCALE: NO SCALE

ACCEPTED BY

BOONE COUNTY HIGHWAY DEPARTMENT

TYPICAL SECONDARY STREET CROSS SECTION FULL DEPTH BITUMINOUS ALTERNATE CURB & GUTTER

STANDARD PL NO. TC-6A SHEET 1 OF

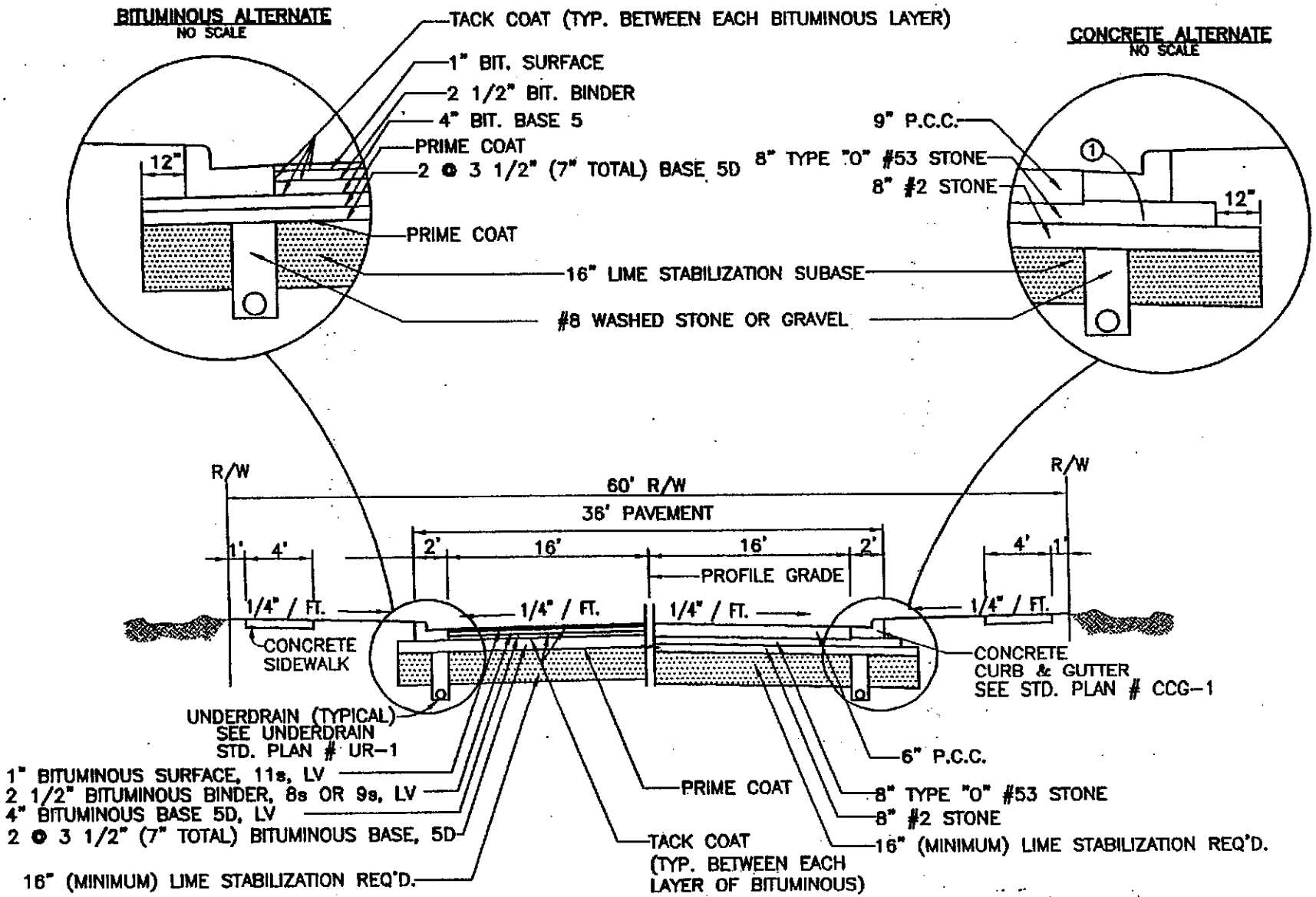

① MODIFY DEPTH OF TYPE "O" #53 STONE TO 9 1/2" UNDER CURB FOR CONCRETE ALTERNATE.

NOTE: USE WITH INDIANA DEPARTMENT OF TRANSPORTATION, LATEST EDITION, STANDARD SPECIFICATIONS

SCALE: NO SCALE

P:\PROJECTS\...TRANS\9657\9657TS04.dwg – MAR 26, 1997 – 17:07:03

ACCEPTED BY
MARCH 1997

BOONE COUNTY HIGHWAY DEPARTMENT

TYPICAL RESIDENTIAL FEEDER CROSS SECTION
CURB & GUTTER

STANDARD PLAN NO. TR-4
SHEET 1 OF 1

5

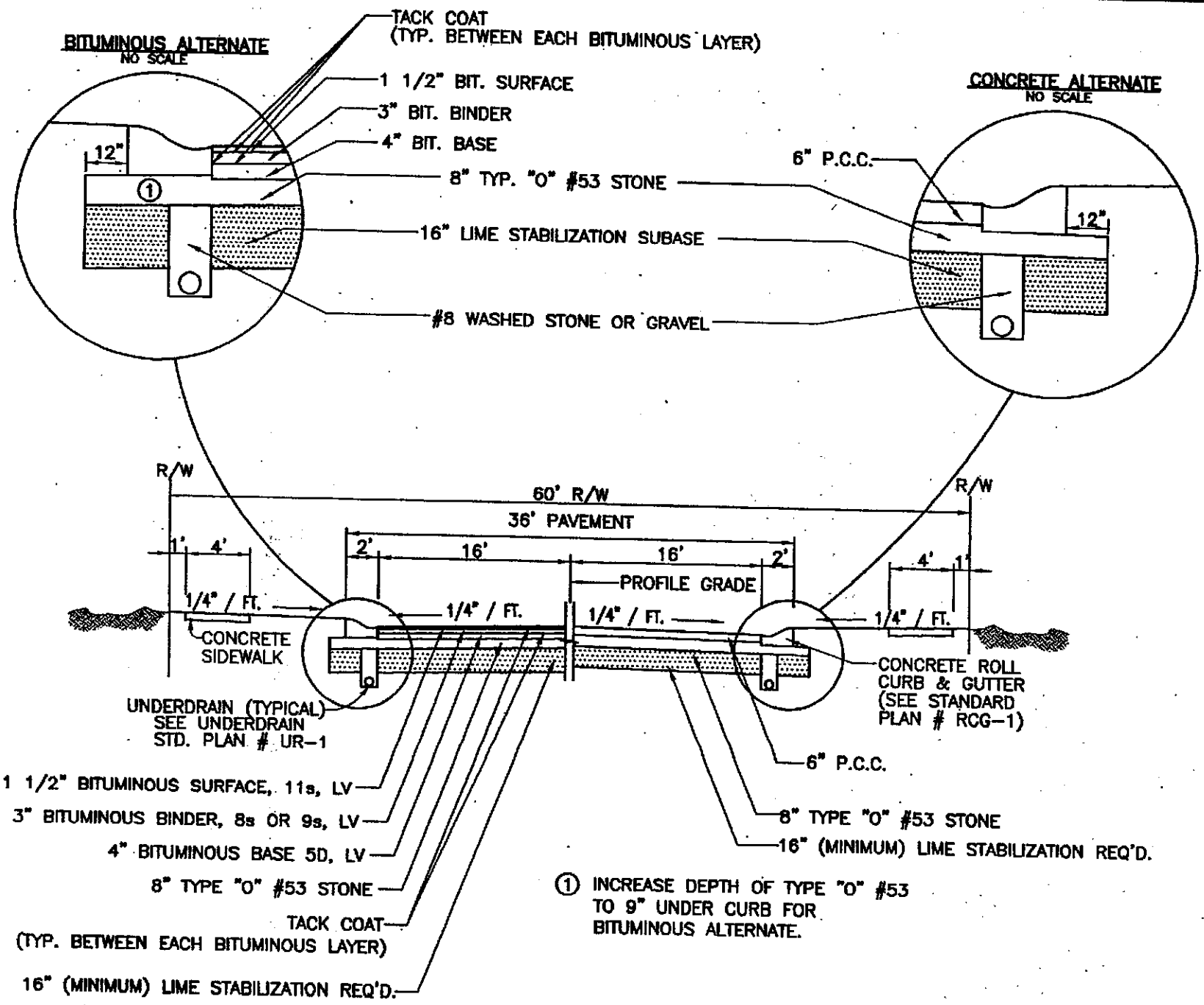

NOTE: USE WITH INDIANA DEPARTMENT OF TRANSPORTATION, LATEST EDITON, STANDARD SPECIFICATIONS

SCALE: NO SCALE

ACCEPTED BY

TYPICAL RESIDENTIAL CROSS SECTION

BOONE COUNTY HIGHWAY DEPARTMENT

STANDARD PLAN NO. TR-1

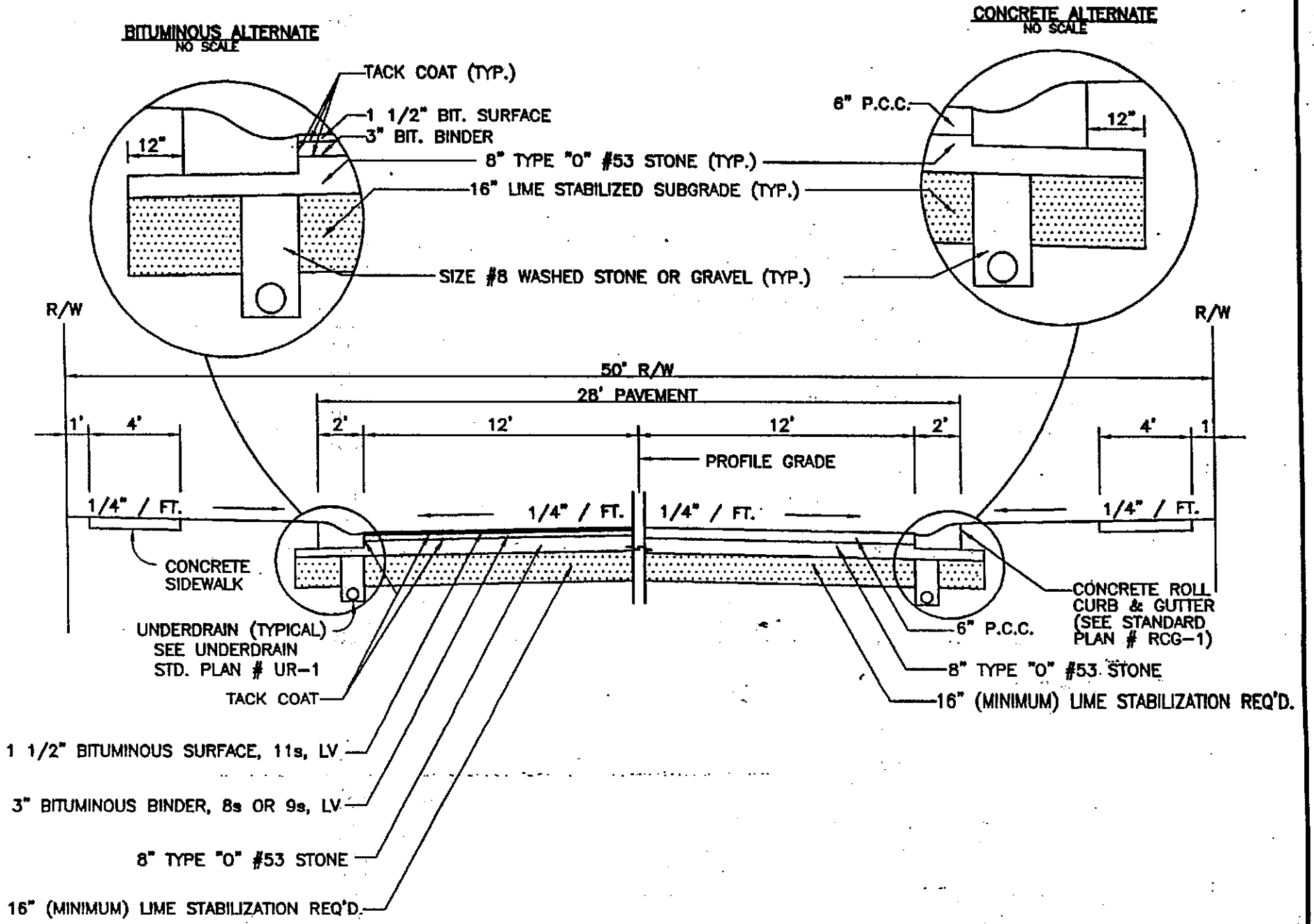

NOTE: USE WITH INDIANA DEPARTMENT OF TRANSPORTATION, LATEST EDITION, STANDARD SPECIFICATIONS

SCALE: NO SCALE

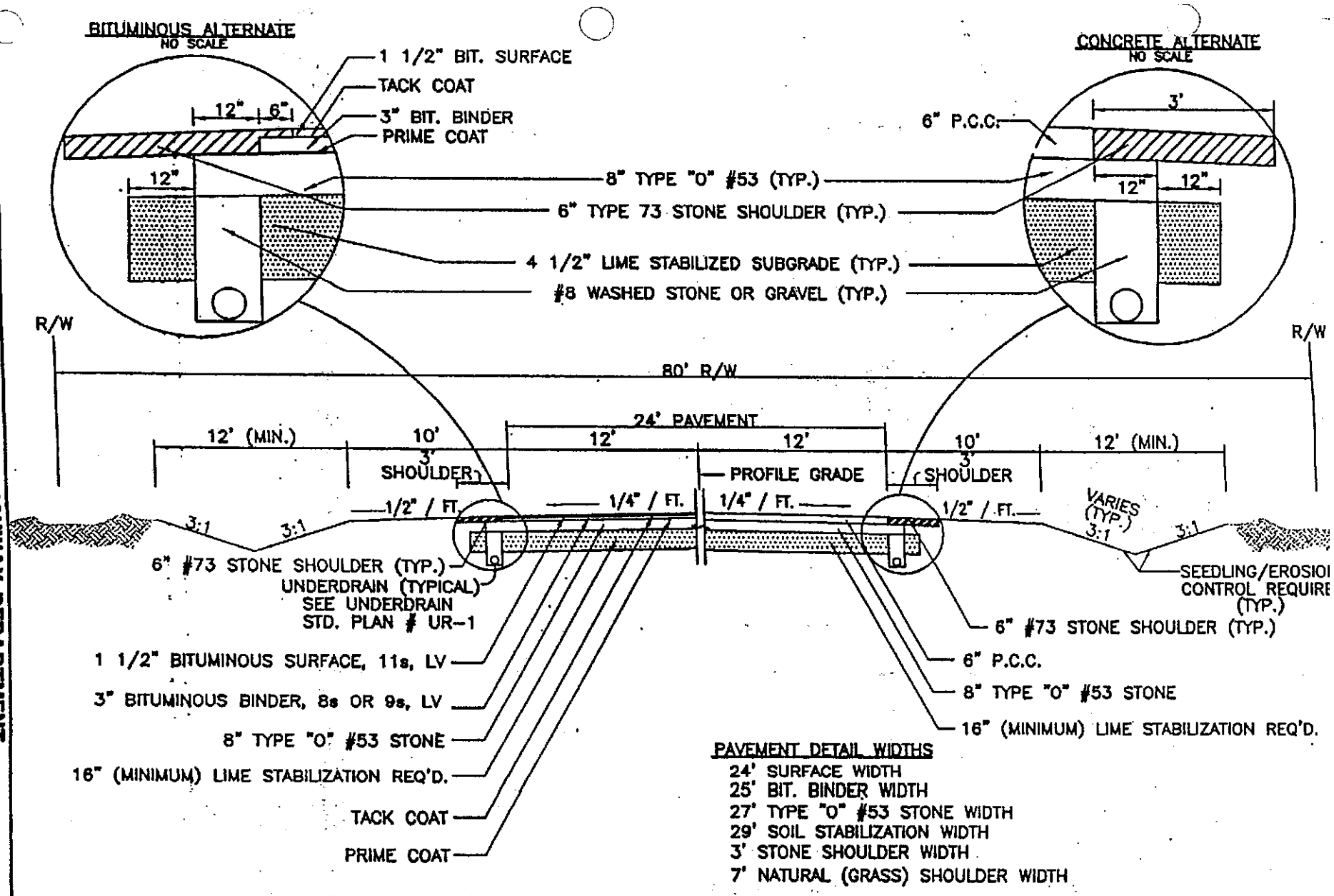

ACCEPTED BY
MARCH 1997

BOONE COUNTY HIGHWAY DEPARTMENT

TYPICAL RESIDENTIAL CROSS SECTION
ROADWAY WITH SHOULDER

STANDARD PLAN
NO. TR-3
SHEET 1 OF 1

NOTE: USE WITH INDIANA DEPARTMENT OF TRANSPORTATION, LATEST EDITION, STANDARD SPECIFICATIONS

SCALE: NO SC

ACCEPTED BY
MARCH 1997

BOONE COUNTY HIGHWAY DEPARTMENT

TYPICAL RESIDENTIAL CROSS SECTION
ROADWAY WITH CURB & GUTTER

STANDARD PLAN NO. TR-1
SHEET 1 OF 1

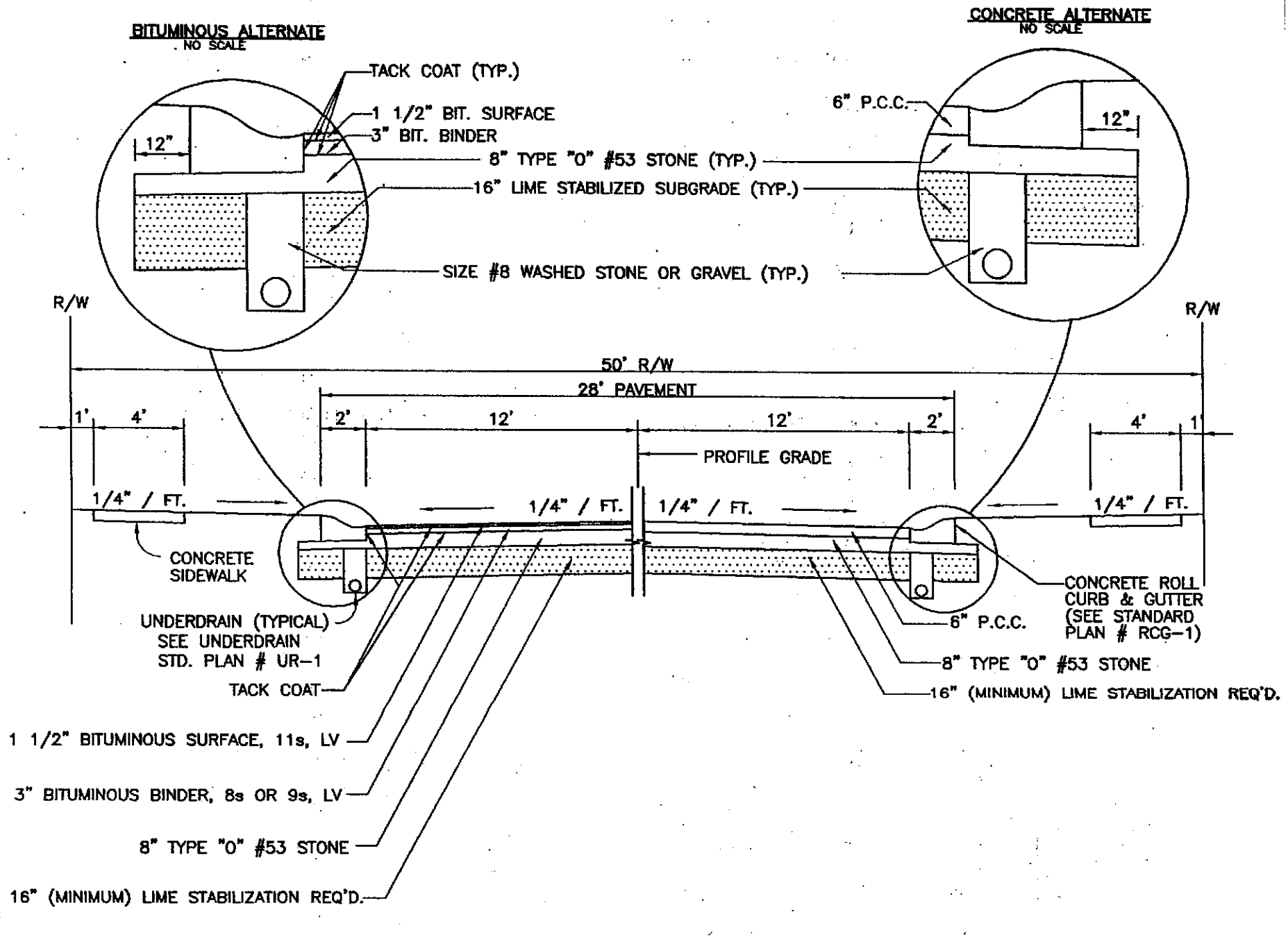

NOTE: USE WITH INDIANA DEPARTMENT OF TRANSPORTATION, LATEST EDITION, STANDARD SPECIFICATIONS

SCALE: NO SCALE

ACCEPTED BY

MARCH 1997

BOONE COUNTY HIGHWAY DEPARTMENT

TYPICAL RESIDENTIAL CROSS SECTION - MODIFIED
ROADWAY WITH CURB & GUTTER

STANDARD PLAN NO. TR-2

SHEET 1 OF 1

9

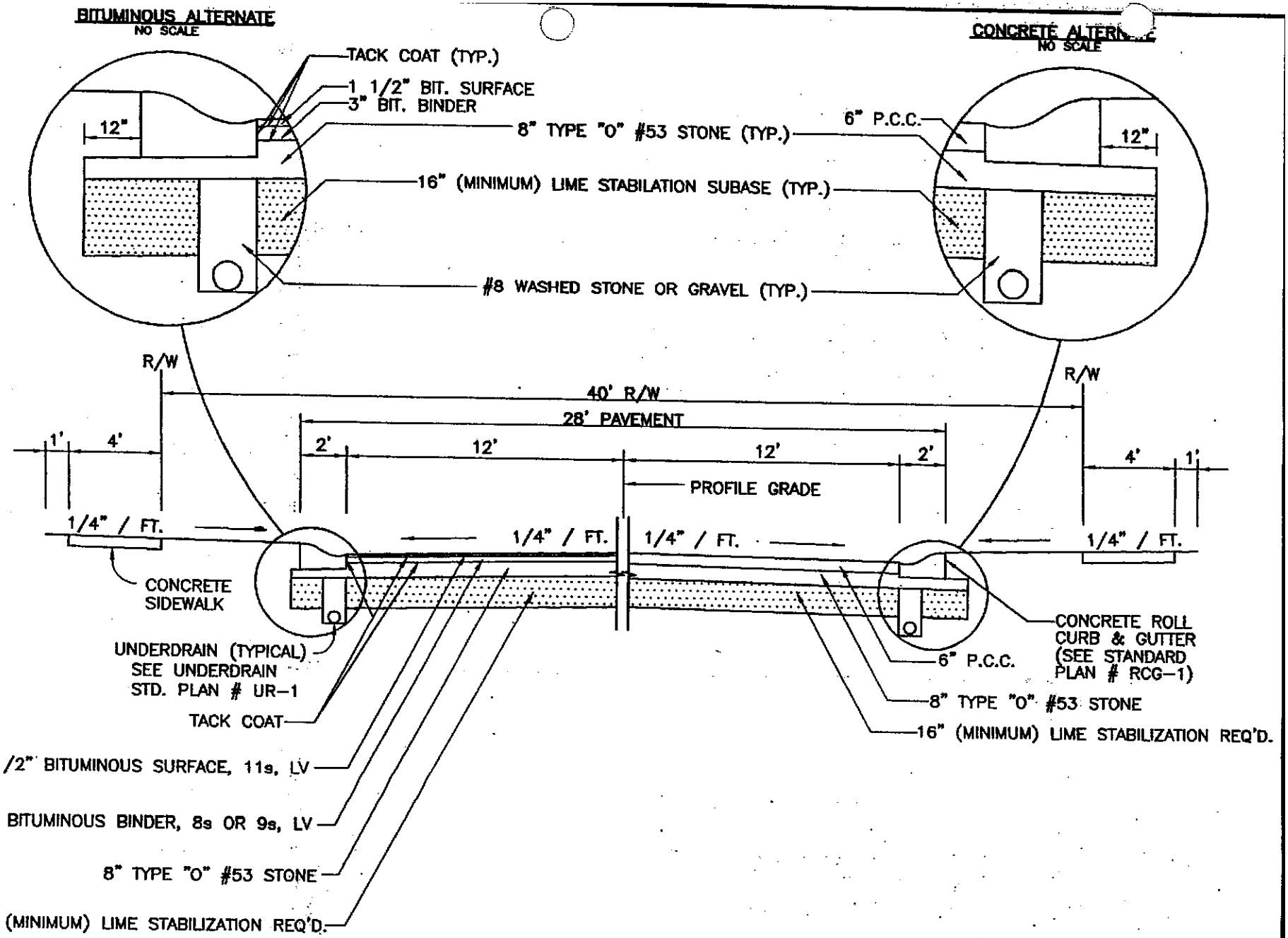

NOTE: USE WITH INDIANA DEPARTMENT OF TRANSPORTATION, [illegible]ST EDITION, STANDARD SPECIFICATIONS

SCALE: NO SCALE

ACCEPTED BY

CONCRETE ROLL CURB & GUTTER

BOONE COUNTY HIGHWAY DEPARTMENT

NOTES:

1. TRANSVERSE JOINTS SHALL BE CUT WITH A JOINTER HAVING A RADIUS OF 1/4" IN. AT 10' MAX. SPACING AS INDICATED OR DIRECTED.
2. THE SPACE BEHIND THE CURB SHALL BE FILLED WITH SUITABLE MATERIAL TO THE REQUIRED ELEVATION AND COMPACTED IN LAYERS NOT TO EXCEED 4".
3. WHEN BUILT IN CONJUNCTION WITH CONCRETE PAVEMENT, EXPANSION AND CONTRACTION JOINTS SHOULD BE PLACED AT THE SAME LOCATIONS AS IN THE PAVEMENT SLAB. THE CURB AND GUTTER SHOULD BE TIED TO THE PAVEMENT BY 1/2" ROUND DEFORMED BARS AT ABOUT 3 FOOT INTERVALS. IF NO CONCRETE PAVEMENT IS BEING BUILT, AT THE TIME, THE CURB IS CONSTR-UCTED. EXPANSION JOINTS SHOULD BE PLACED AT THE ENDS OF ALL RETURNS AND AT INTERVALS NOT TO EXCEED 100 FEET. CONTRACTION JOINTS SHOULD BE INSTALLED AT 10 FOOT SPACING.
4. WHEN CURB ABUTS CONCRETE DRAINAGE STRUCTURES, EXPANSION JOINT MATERIAL IS REQUIRED.

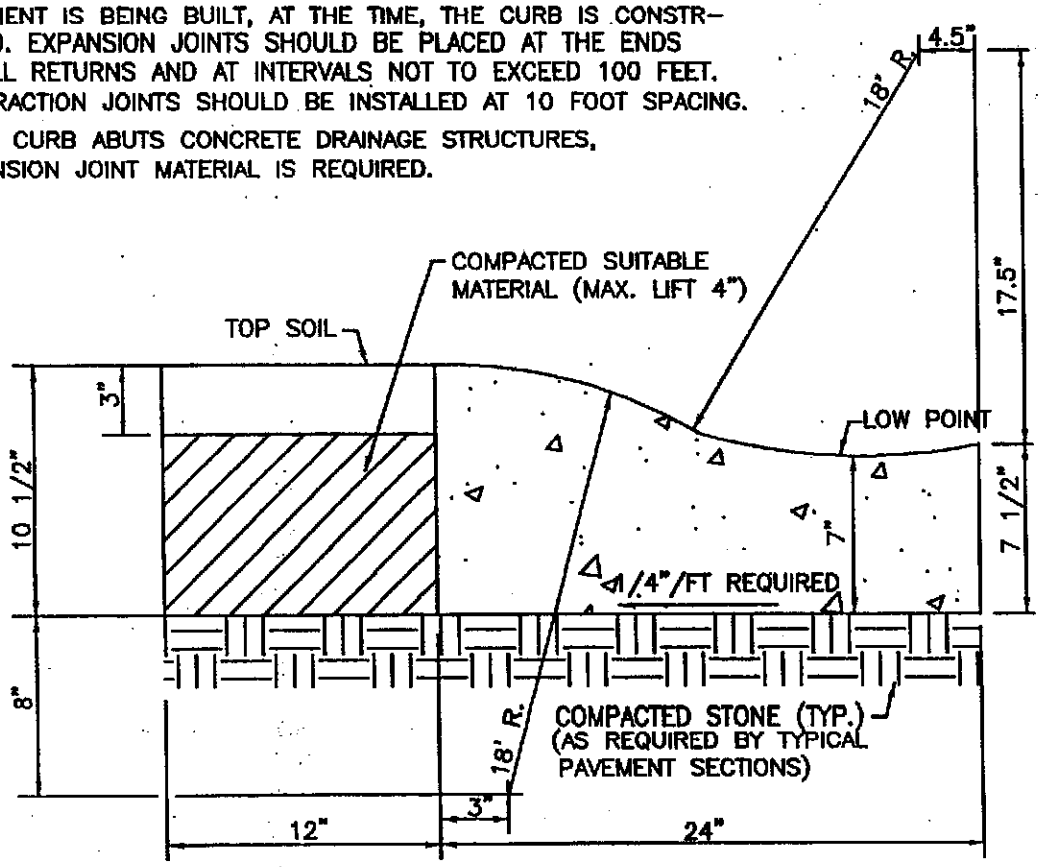

NOTE: USE WITH INDIANA DEPARTMENT OF TRANSPORTATION, LATEST EDITION, STANDARD SPECIFICATIONS

SCALE: NO SCALE

STANDARD PLAN NO. RCG-1
SHEET 1 OF 1

10

PROJECTS\CI AS\9657\9657TSUD.dwg — MAR 26, 1997 — 17:23:51

ACCEPTED BY

BOONE COUNTY HIGHWAY DEPARTMENT

TYPICAL UNDERDRAIN DETAIL

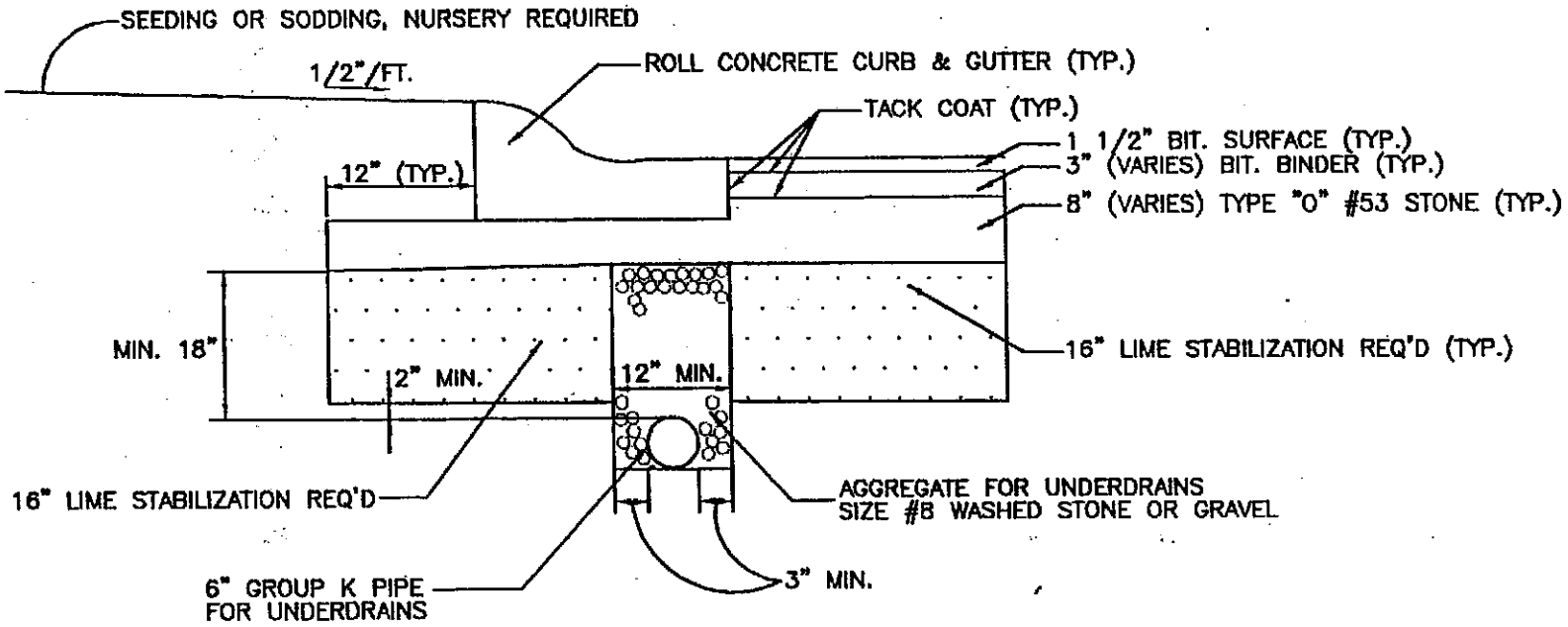

NOTE: UNDERDRAIN OUTLETS TO BE CONNECTED TO EXISTING/PROPOSED STORM SYSTEM OR ROADSIDE DITCHES AS APPROVED AND DIRECTED BY BOONE COUNTY HIGHWAY ENGINEER.

STANDARD PLAN NO. UR-1
SHEET 1 OF 1

NOTE: USE WITH INDIANA DEPARTMENT OF TRANSPORTATION, LATEST EDITION, STANDARD SPECIFICATIONS

SCALE: NO SCALE

\PROJECTS\CIVTRANS\9857\9857TSSD.dgn – MAR 26, 1997 – 17:24:51

NOTES:

① TEMPORARY EXTENSION ABOVE GROUND TO BE REMOVED UPON CONNECTION TO LATERAL

② UNDERDRAIN OUTLETS TO EXISTING\PROPOSED STORM SYSTEM OR ROADSIDE DITCHES AS APPROVED AND DIRECTED BY THE BOONE COUNTY HIGHWAY ENGINEER.

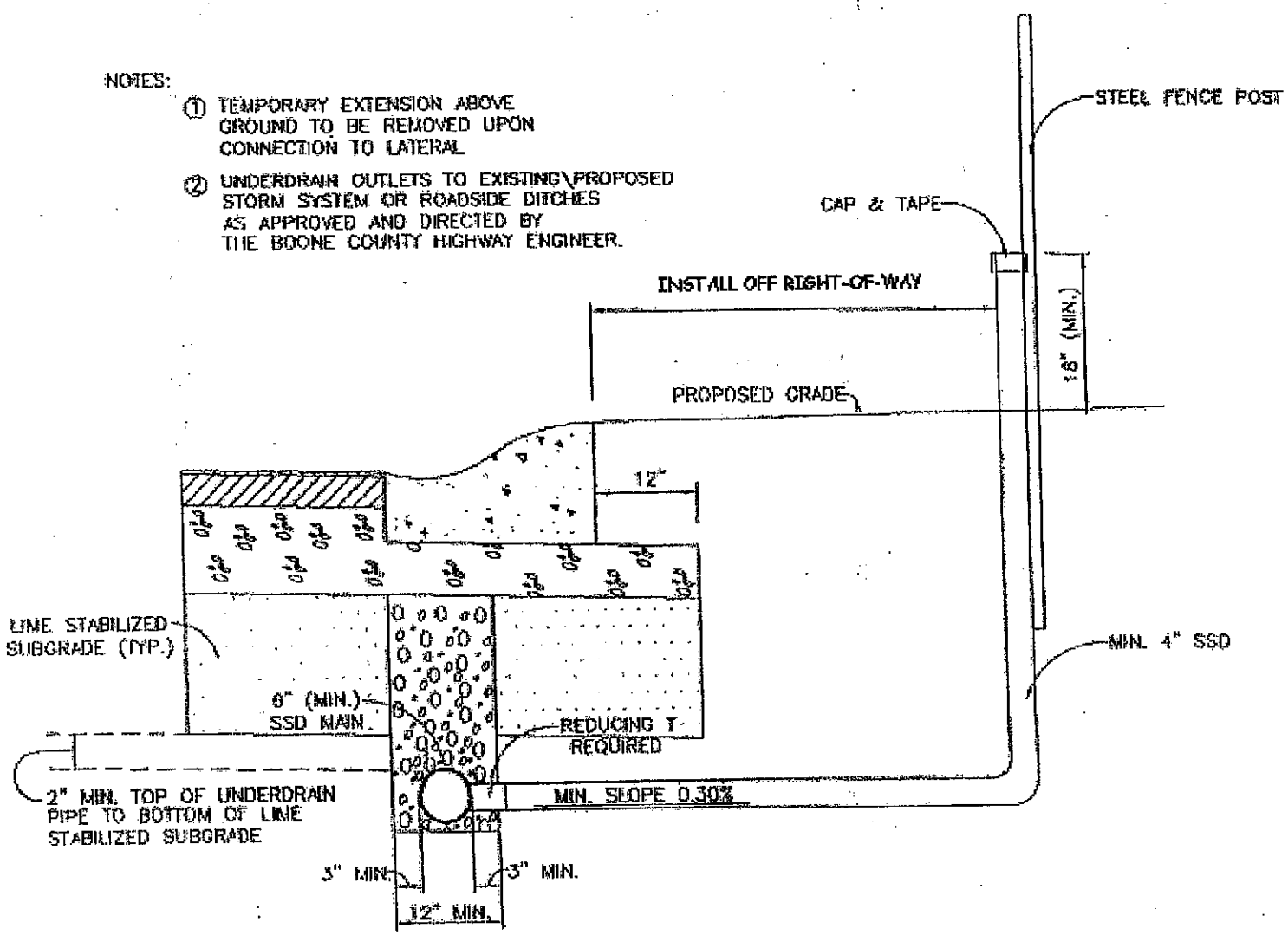

NO SCALE

BOONE COUNTY HIGHWAY DEPARTMENT

TYPICAL SSD LATERAL TO INDIVIDUAL LOTS ALONG STREETS

ACCEPTED BY

MARCH 1996

STANDARD PLA NO. 5LR-1

SHEET 1 OF

12

PROJECTS\CIVILANS\9657\9657TSW1.dwg — MAR 26 1997 — 17:22:49

ACCEPTED BY

BOONE COUNTY HIGHWAY DEPARTMENT

SIDEWALK DETAILS

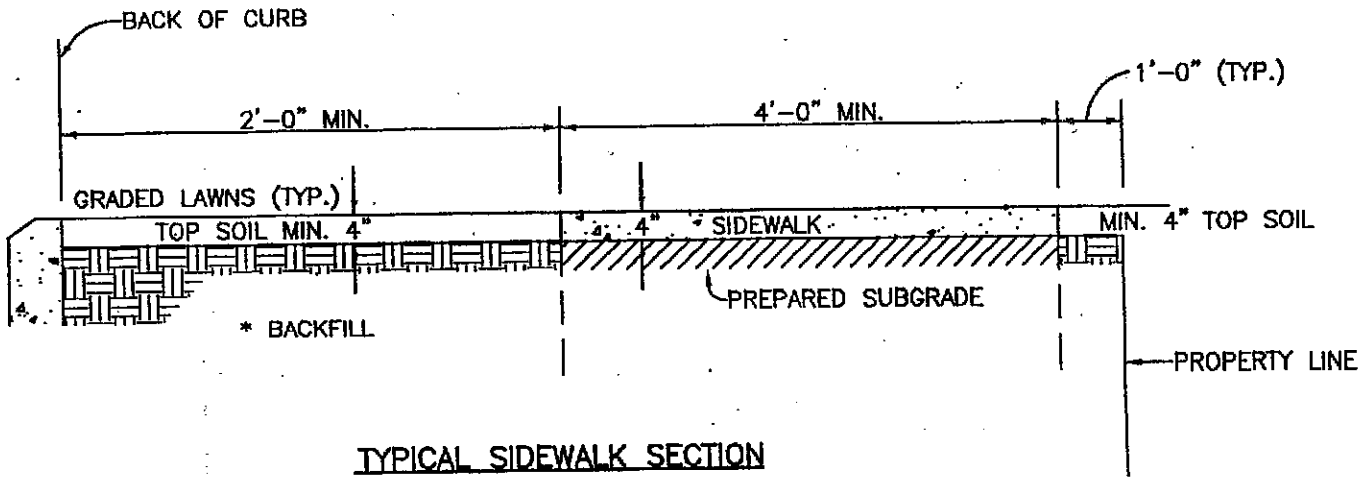

TYPICAL SIDEWALK SECTION

* THE SPACE BEHIND THE CURB SHALL BE FILLED WITH SUITABLE MATERIAL TO THE REQUIRED ELEVATION AND COMPACTED IN LAYERS NOT TO EXCEED 6" IN DEPTH.

ALL CURB, SIDEWALK, AND DRIVES SHALL BE CONSTRUCTED WITH CLASS "A" CONCRETE AND IN ACCORDANCE WITH SECTION 604 OF THE INDOT STANDARD SPECIFICATIONS.

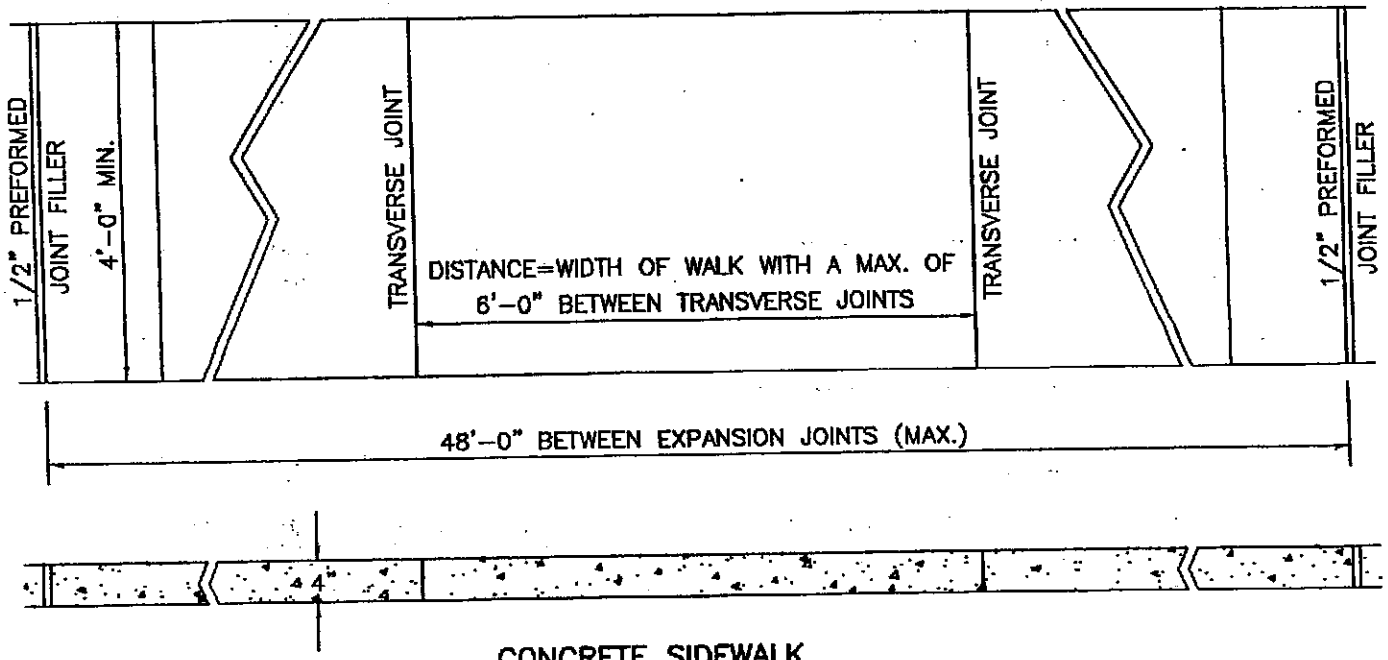

CONCRETE SIDEWALK

STANDARD PLAN NO. SW-1
SHEET 1 OF 3

NOTE: USE WITH INDIANA DEPARTMENT OF TRANSPORTATION, LATEST EDITION, STANDARD SPECIFICATIONS

SCALE: NO SCALE

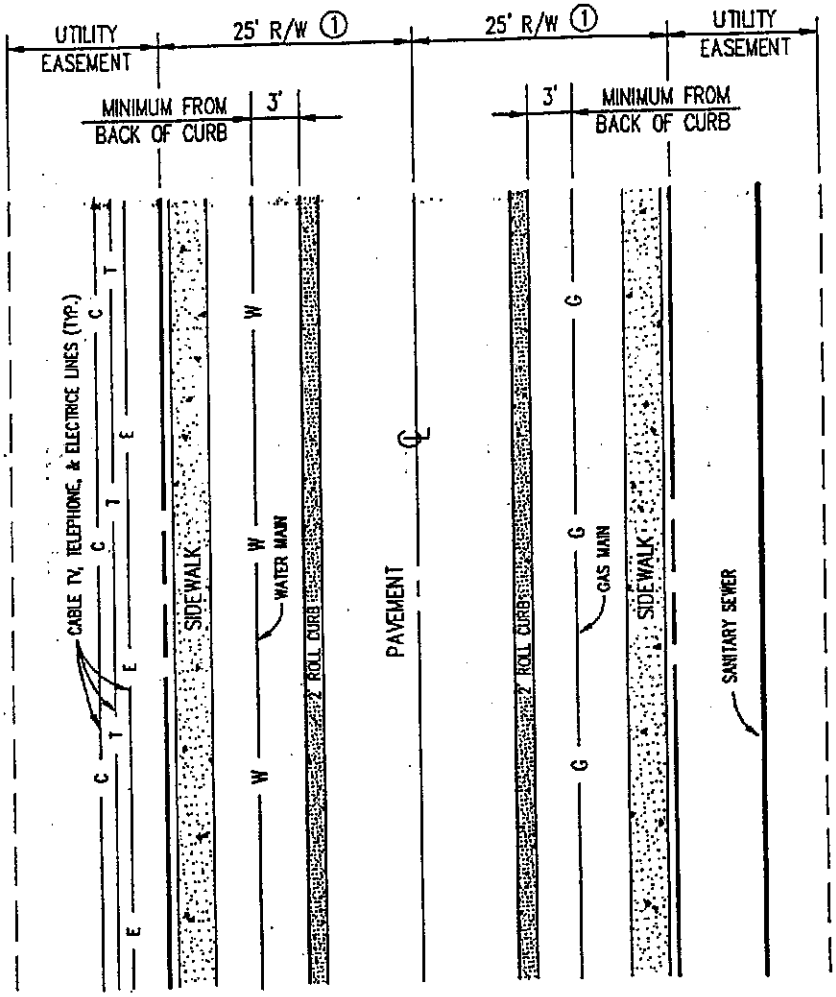

NOTES:

1.) R/W shall be increased when road width (b–b curbs) exceeds 30'–0".

2.) Only gas & water utilities are allowed to be located in R/W.
All others shall be located in the utility easements, except to cross road.

3.) Deviations will require a variance during the permit process.

TYPICAL UTILITY LOCATIONS ON A LOCAL ROAD

NO SCALE

ACCEPTED BY

TYPICAL COMMERCIAL/

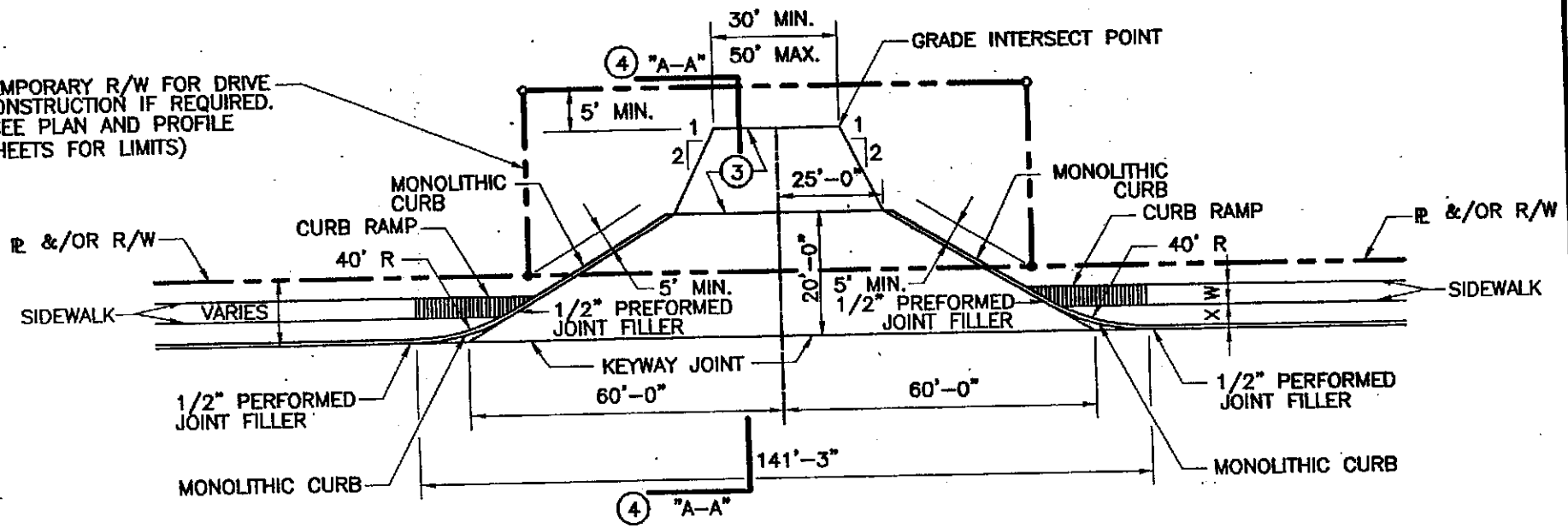

TYPE 1 DRIVE (COMMERCIAL/INDUSTRIAL)
NO SCALE

GENERAL NOTES

1. THE TYPE 1 DRIVE IS DESIGNED TO ACCOMMODATE THE INDIANA SINGLE (LEGAL MAXIMUM) DESIGN VEHICLE WITH A 45 FOOT TURNING RADIUS. THIS DRIVE SHALL BE SPECIFIED AT TRUCK STOPS AND ENTRANCES TO HEAVY INDUSTRIAL PROPERTY
2. ALL TYPE 1 DRIVES SHALL BE CONCRETE TO AT LEAST THE RIGHT–OF–WAY LINE WITH A MINIMUM LENGTH OF 20 FEET.
3. THE MINIMUM DRIVEWAY PAVEMENT SECTION IS FOR UP TO 200 TRUCKS PER DAY. WHEN THE TRUCK TRAFFIC COUNT IS GREATER THAN 200 TRUCKS PER DAY, THE REQUIRED PAVEMENT SECTION WILL BE AS PROPOSED BY THE DEVELOPER/PROPERTY OWNER FOR REVIEW AND APPROVAL OF THE BOONE COUNTY HIGHWAY ENGINEER.
4. SEE STD. PLAN NO. DC–1, SHEET 2 OF 2 FOR SECTION "A–A" DETAIL AND ADDITIONAL HANDICAP NOTES.

LEGEND

X = THE DISTANCE BETWEEN FACE OF CURB AND SIDEWALK.

Y = WIDTH OF SIDEWALK

▨ CURB RAMP TYPE N OR O

STANDARD PLAN NO. DC–1

NOTE: USE WITH INDIANA DEPARTMENT OF TRANSPORTATION, LATEST EDITION, STANDARD SPECIFICATIONS.

SCALE: NO SCALE

ACCEPTED BY

BOONE COUNTY HIGHWAY DEPARTMENT

TYPICAL COMMERCIAL/ INDUSTRIAL DRIVE - TYPE 1

STANDARD PLAN NO. DC-1 SHEET 2 OF 2

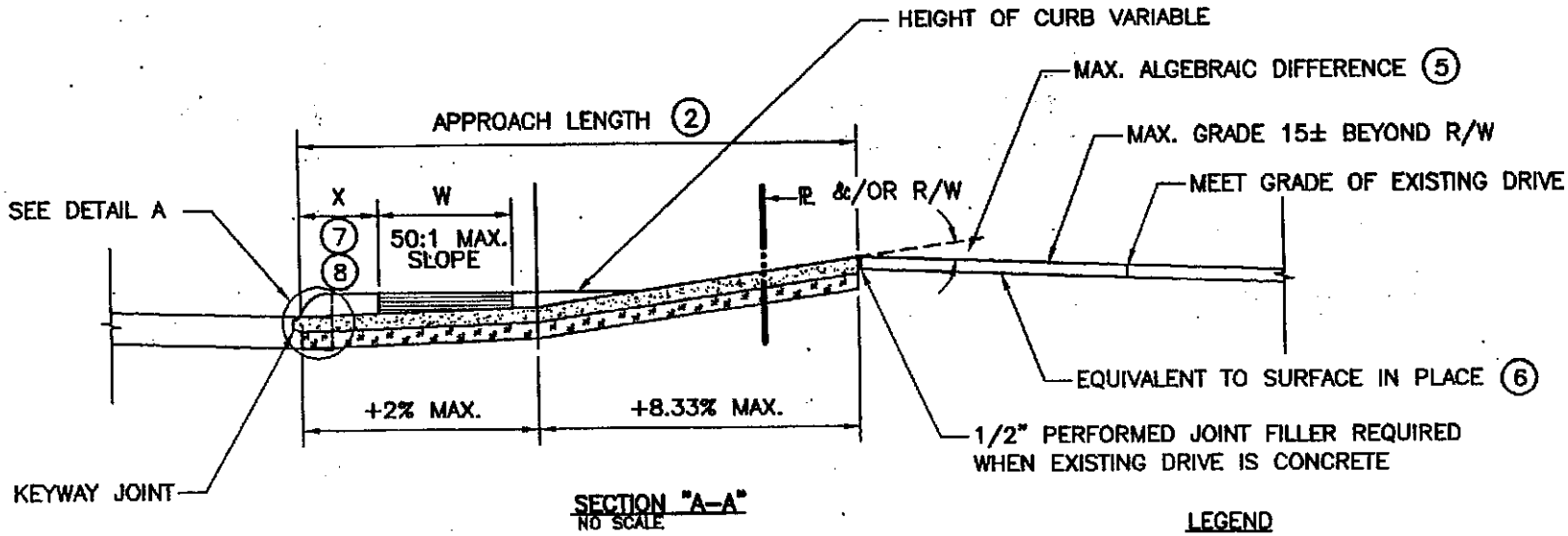

SECTION "A–A"
NO SCALE

LEGEND

X = THE DISTANCE BETWEEN FACE OF CURB AND SIDEWALK.

Y = WIDTH OF SIDEWALK

▥ CURB RAMP TYPE N OR O

GENERAL NOTES

(5) THE MINIMUM ALGEBRAIC DIFFERENCE IN GRADES FOR ANY 10 FOOT INTERVAL SHALL NOT EXCEED 89% FOR CREST VERTICAL CURVES, NOR 12% FOR SAG VERTICAL CURVES.

(6) REFER TO PLANS FOR PAVEMENT TYPE AND THICKNESS REQUIRED BEYOND RIGHT–OF–WAY LINE, AND DRIVEWAY WIDTH AND LENGTH TO BE CONSTRUCTED.

(7) WHEN X IS EQUAL TO OR GREATER THAN 2 FEET, BUT LESS THAN 6 FEET, CURB RAMP TYPE O SHALL BE REQUIRED.

(8) WHEN X IS EQUAL TO OR GREATER THAN 6 FEET, NO CURB RAMP IS REQUIRED.

(9) THE LIMITS FOR X INDICATED IN GENERAL NOTES 7 AND 8 ARE BASED ON A CURB HEIGHT OF 6 INCHES. FOR OTHER CURB HEIGHTS, THESE LIMITS SHALL BE ADJUSTED.

(10) CURB RAMP TYPE N SHALL BE REQUIRED WHEN SIDEWALK IS ADJACENT TO CURB.

(11) DRIVEWAY CULVERTS WHICH CANNOT BE LOCATED OUTSIDE THE CLEAR ZONE SHALL REQUIRE GRATED INLETS AND OUTLETS IN ACCORDANCE WITH TYPICAL INDOT STANDARDS.

(12) THIS SHEET ACCOMPANIES STANDARD PLAN NO. DC–1, SHEET 1 OF 2.

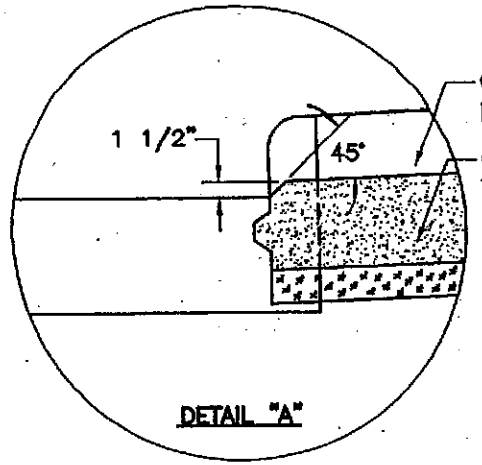

DETAIL "A"

NOTE: USE WITH INDIANA DEPARTMENT OF TRANSPORTATION, LATEST EDITION, STANDARD SPECIFICATIONS

SCALE: NO SCALE

MAJOR SUBDIVISION ENTRANCE

1. ACCEL AND DECEL LANES SHALL BE DESIGNED AS ILLUSTRATED BELOW.
2. THE MINIMUM DESSIGN FOR PASSING BLISTERS SHALL BE AS SHOWN BELOW.
3. PASSING BLISTERS SHALL BE INSTALLED WHEN DEEMED NECESSARY BY THE BOONE COUNTY HIGHWAY DEPT.

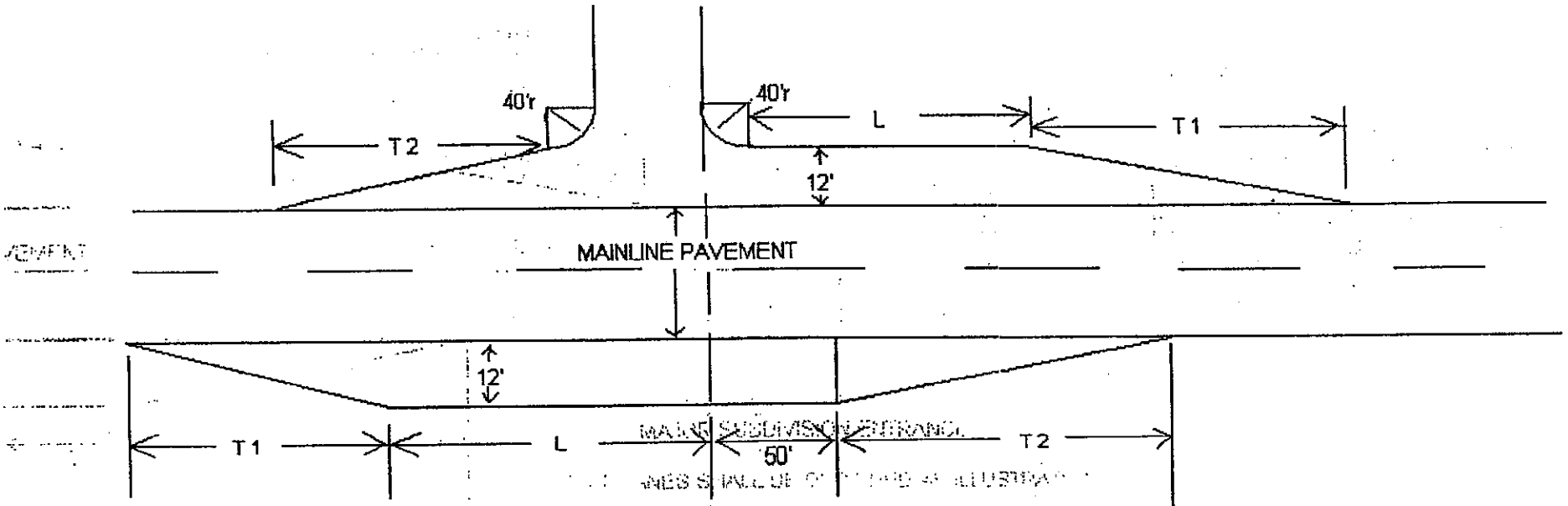

MINIMUM DIMENSIONS FOR PASSING BLISTERS AND ACCEL--DECEL LANES BASED ON POSTED SPEED			
POSTED SPEED (mph)	T 1 (ft)	L (ft)	T 2 (FT)
30 or less	100	150	100
GREATER THAN 30 TO LESS THAN 50	150	150	150
50 OR GREATER	200	200	200

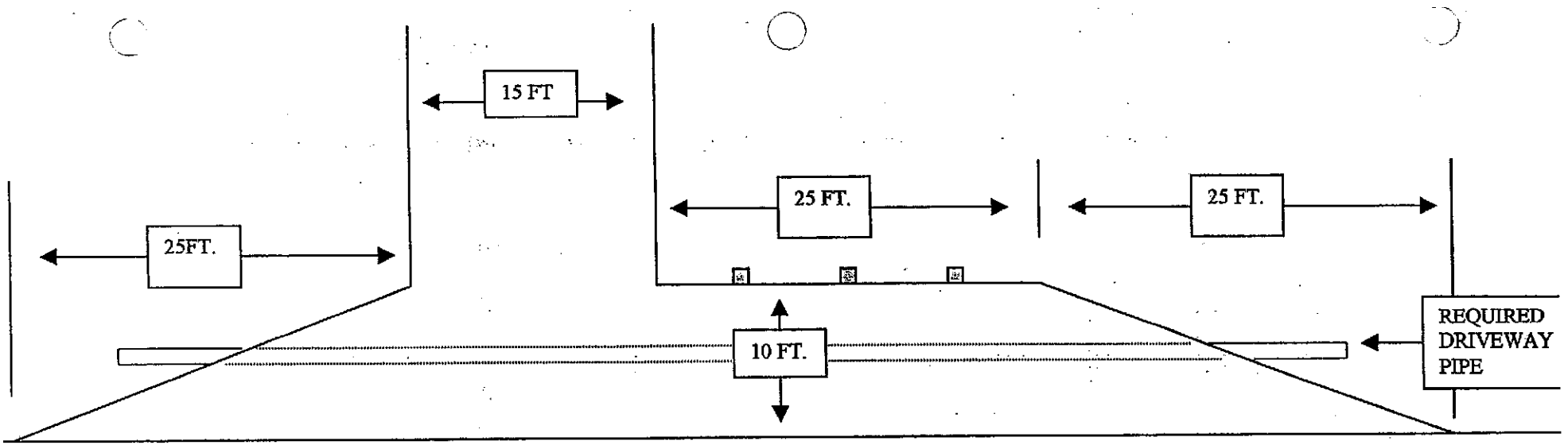

MINOR SUB-DIVISION DRIVEWAY AND MAILBOX PLAN

NO.# MSD –1a

STOP Sign (R1-1)

R1-1
30" x 30"

YIELD Sign (R1-2)

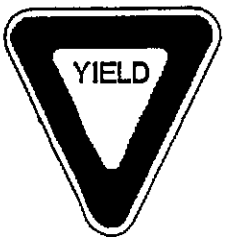

R1-2
30" x 30" x 30"

R1-4
18" x 6"

R1-3
12" x 6"

SPEED LIMIT Signs (R2-1)

R2-1
24" x 30"

NOTES:

1.) Signs shall be single faced with Engineering Grade reflectorized sheeting on 0.080" thick aluminum sheet material per INDOT Standard Specifications 912.10.

2.) Posts shall be 11'-0" long, 3 lb/ft green painted or galvanized channel sign post per INDOT Standard Specification 909.14.

3.) All sign sizes, shapes, colors and material shall meet the Indiana Manual on Uniform Traffic Control Devices.

TYPICAL SUBDIVISION REGULATORY SIGNS

NO SCALE

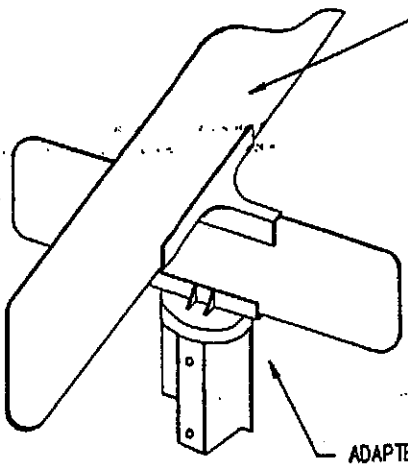

MIN. 6"x24"x0.100 ALUMINUM WITH DOUBLE FACED GREEN REFLECTORIZED ENGINEER GRADE BACKGROUND PER STANDARD SPECS. SEC. 912.10 AND 4" WHITE REFLECTORIZED ENGINEER GRADE LETTERS.

ADAPTER ASSEMBLY (SEE BELOW)

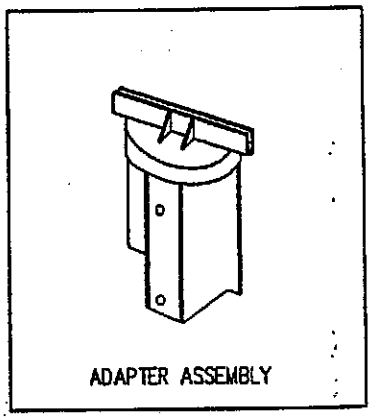

ADAPTER ASSEMBLY

3 LBS./FT. GREEN PAINTED OR GALVANIZED CHANNEL SIGN POST PER STANDARD SPECS SEC. 909.14(a)

DRIVEN OR SET IN COMPACTED BACKFILL

8'-0"

3'-0"

NOTES:

1.) Private Streets shall be so indicated on the left hand side of the sign with dual line 1 1/2" black letters on yellow reflectorized background preceding the street name.

2.) One sign assembly shall be located at each intersection on the northeast corner when possible.

3.) Stop signs shall not be installed on the street name sign posts.

SUBDIVISION STREET NAME SIGNS

NO SCALE

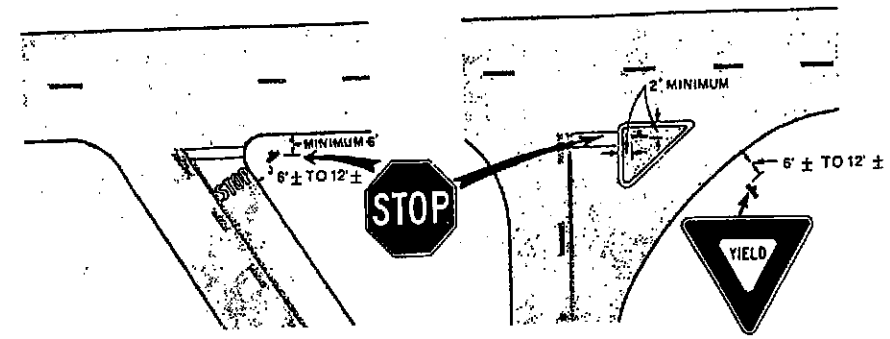

ACUTE ANGLE INTERSECTION

CHANNELIZED INTERSECTION

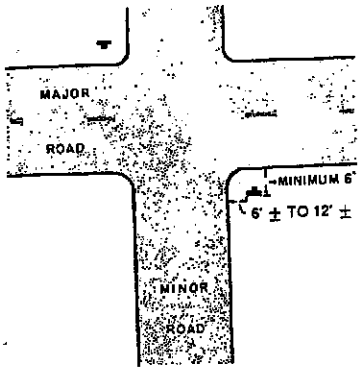

MINOR CROSSROAD

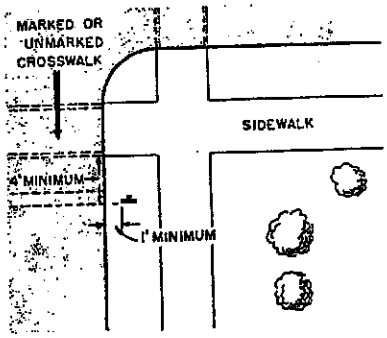

URBAN INTERSECTION

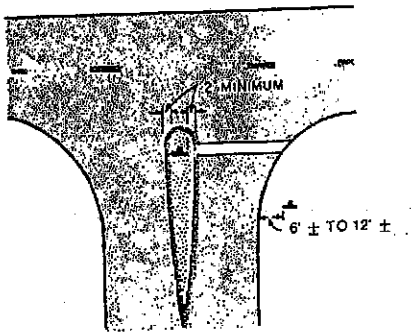

DIVISIONAL ISLAND

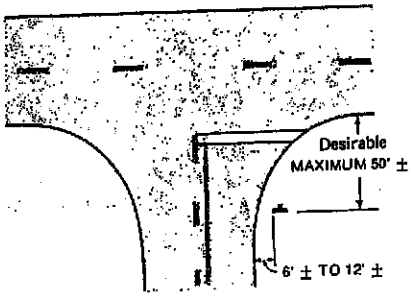

WIDE THROAT INTERSECTION

Figure 2-2. Typical locations for stop signs and yield signs.

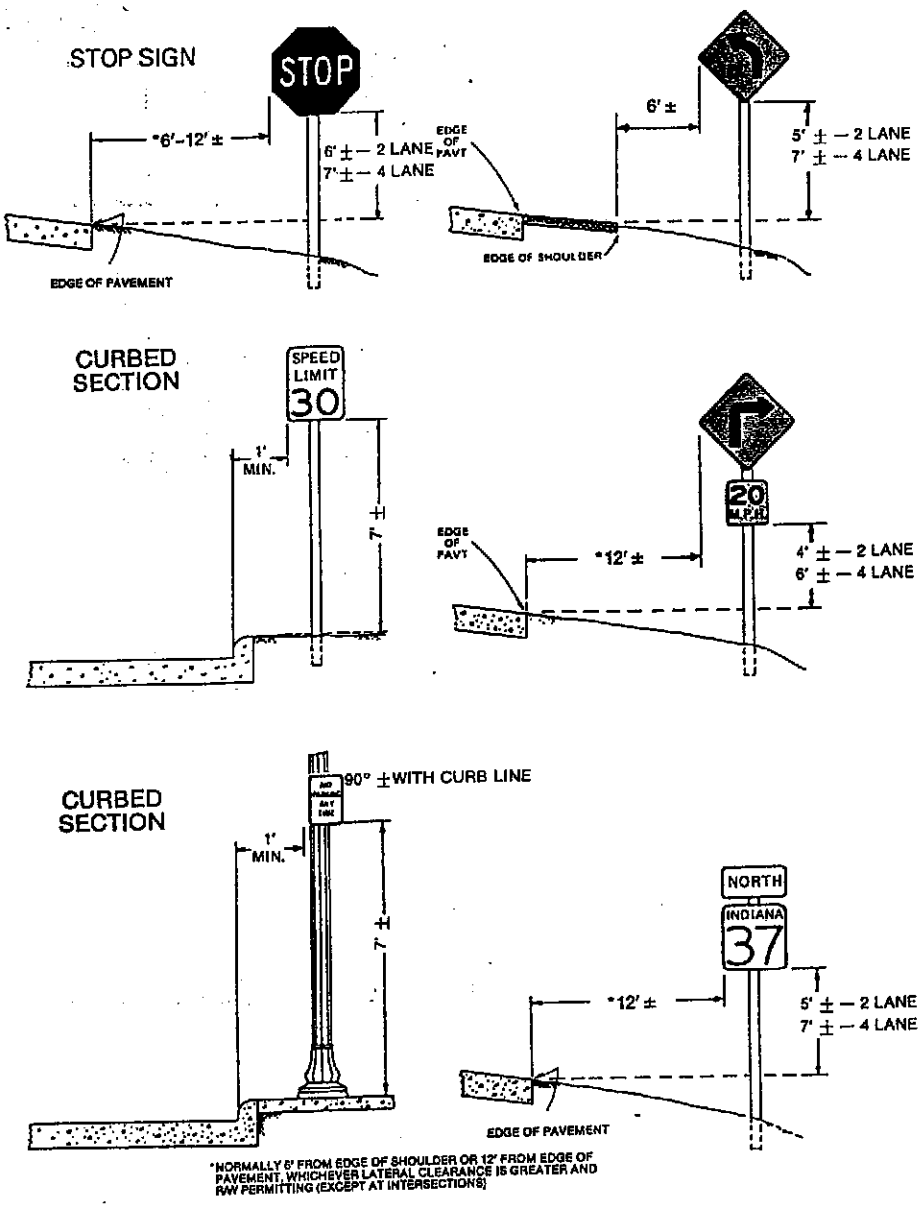

**Normal minimum lateral clearance for new installations except on narrow sidewalks and when pole line is close to curb.

***A clearance of one foot from the curb face is permissible where sidewalk width is limited or where existing poles are close to the curb.

Figure 2-1. Position of signs in relation to roadway (Conventional roads and streets)

BOONE COUNTY HIGHWAY DEPT.

DETAIL FOR CUT ROAD PATCHING

ON ALL CUTS, ROADS THAT REQUIRE THE EXISTING PAVEMENT TO BE REMOVED, THIS DETAIL AS SHOWN SHALL BECOME A PART OF THIS PERMIT.

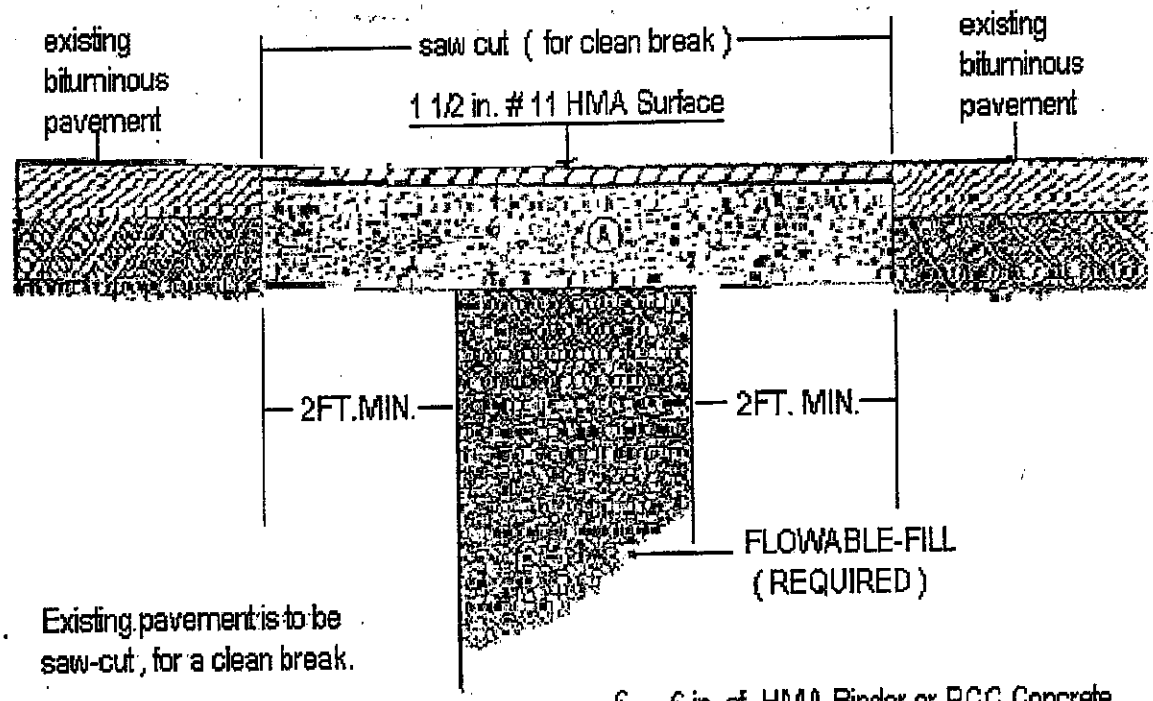

1. Existing pavement is to be saw-cut, for a clean break.
2. Trench spoils are to be removed from the site.
3. All tile under the pavement shall be smooth - core plastic pipe.
4. Back-fill will be flowable - fill i.n.d.o.t. standards specifications 213.04
5. Bituminous tack is to be applied to all exposed surfaces. i.n.d.o.t. standards 406.02 - 406.05
6. 6 in. of HMA Binder or PCC Concrete
7. 1 1/2 in. of # 11 HMA surface, finished to existing grade.
8. NO Asphalt or Concrete shall be placed on frozen ground.
9. IF, for any reason , the project can not be completed in the same day, the trench shall be plated and secured with no less than a 1 in. thick steel plate to allow traffic to pass.

RECOMMENDED;	1 / 02 / 03	U-1
APPROVED; Thomas D. Rowe	1 / 02 / 03	

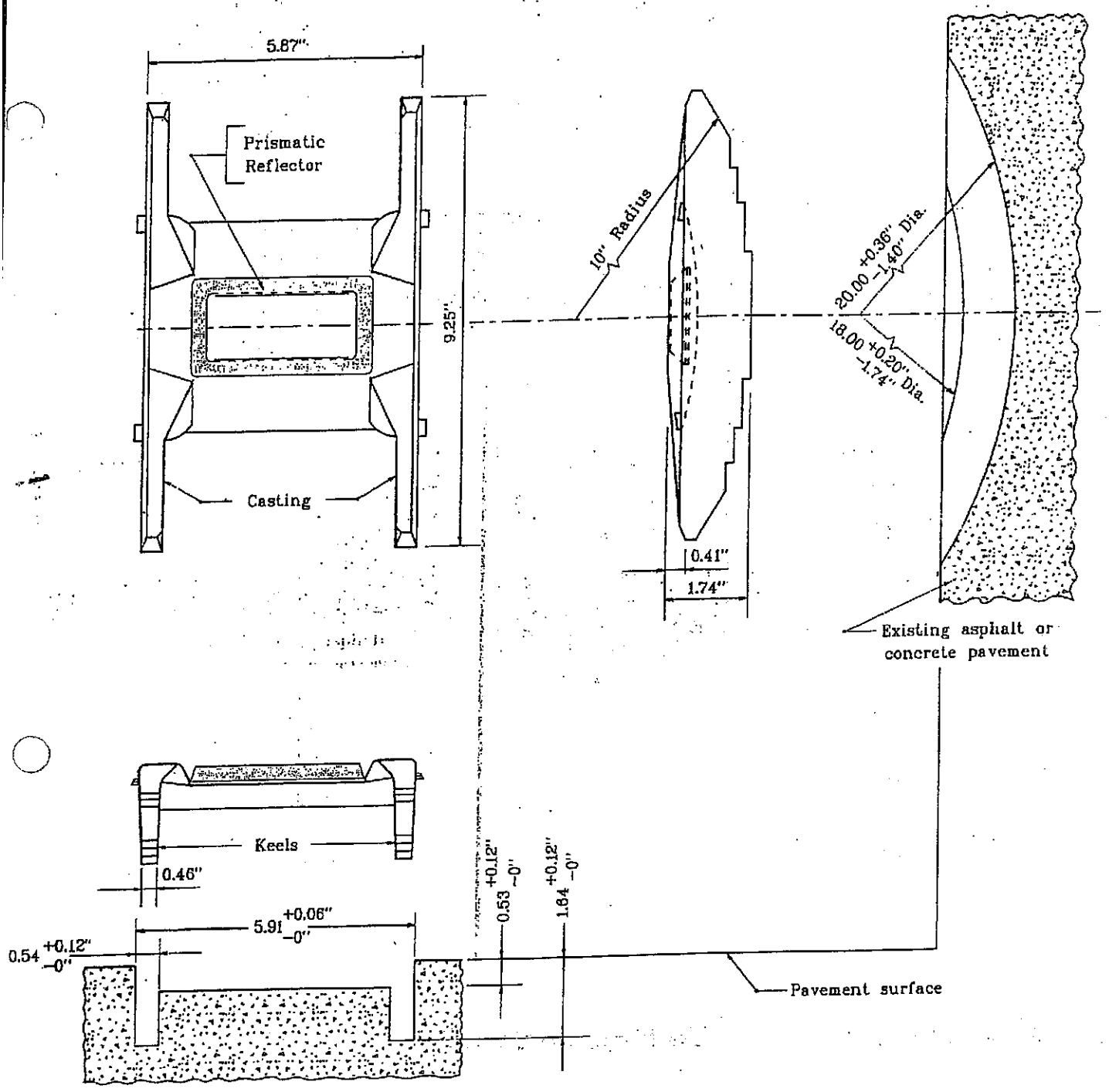

INDOT Drawing. No. E 808-MKRM-10

RAISED PAVEMENT MARKER

FIGURE P-22

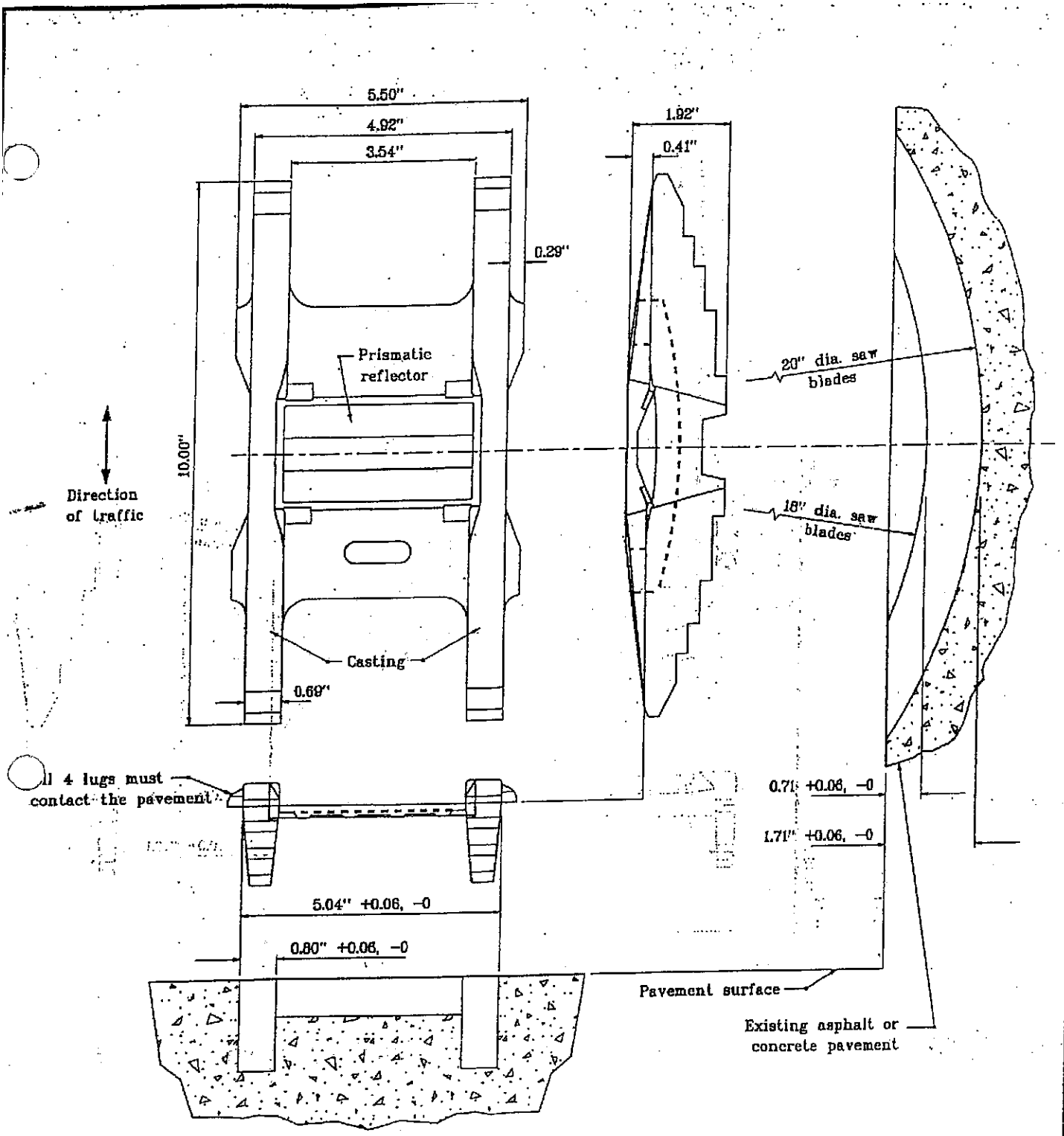

INDOT Drawing. No. E 808-MKRM-11

RAISED PAVEMENT MARKER

FIGURE P-22a

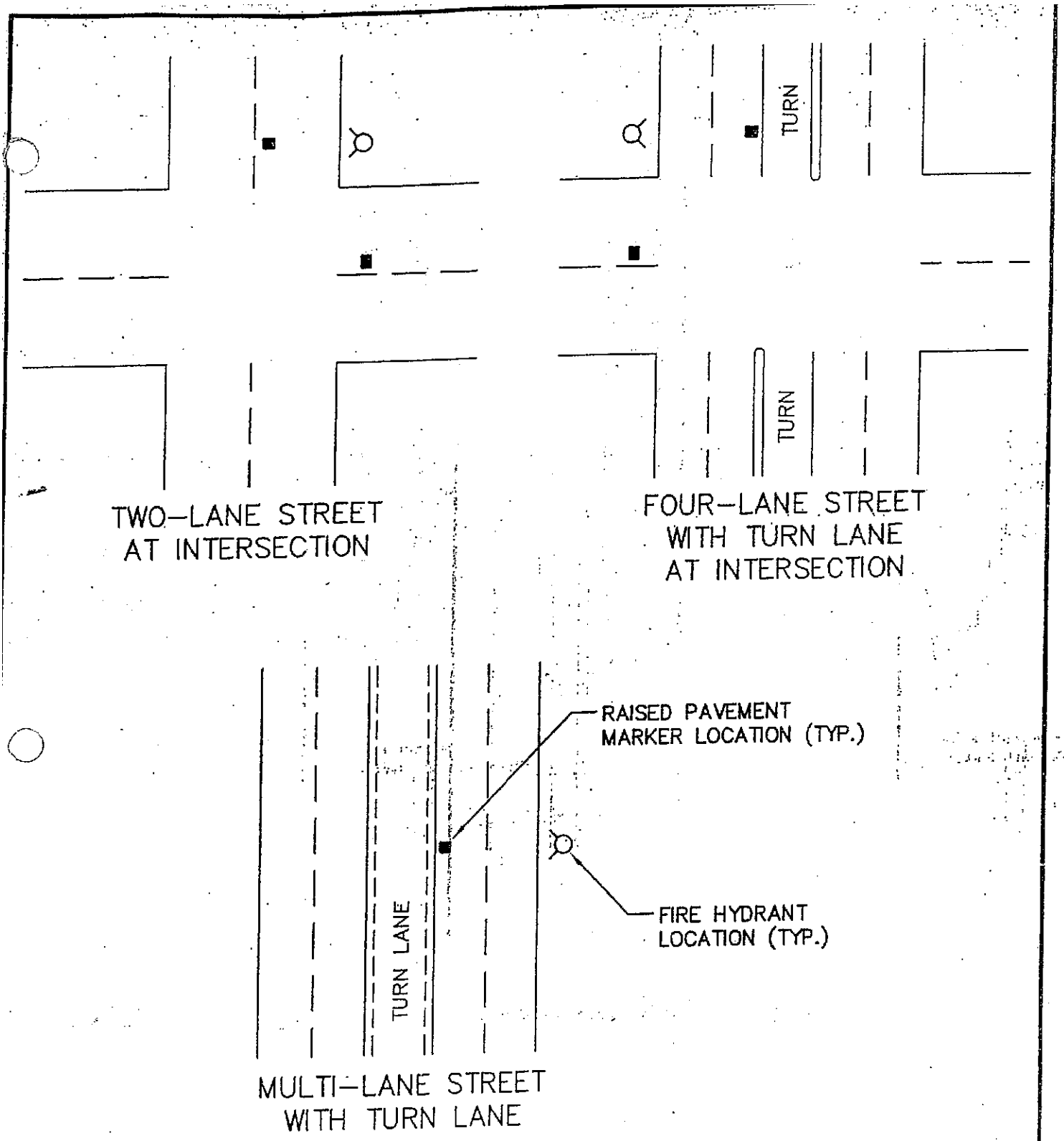

RAISED PAVEMENT MARKER

FIGURE P–22b

ACCEPTED BY

TYPICAL PRIMARY STREET CROSS SECTION
CURB & GUTTER

BOONE COUNTY HIGHWAY DEPARTMENT

STANDARD PLAN NO. TC-5
SHEET 1 OF 1

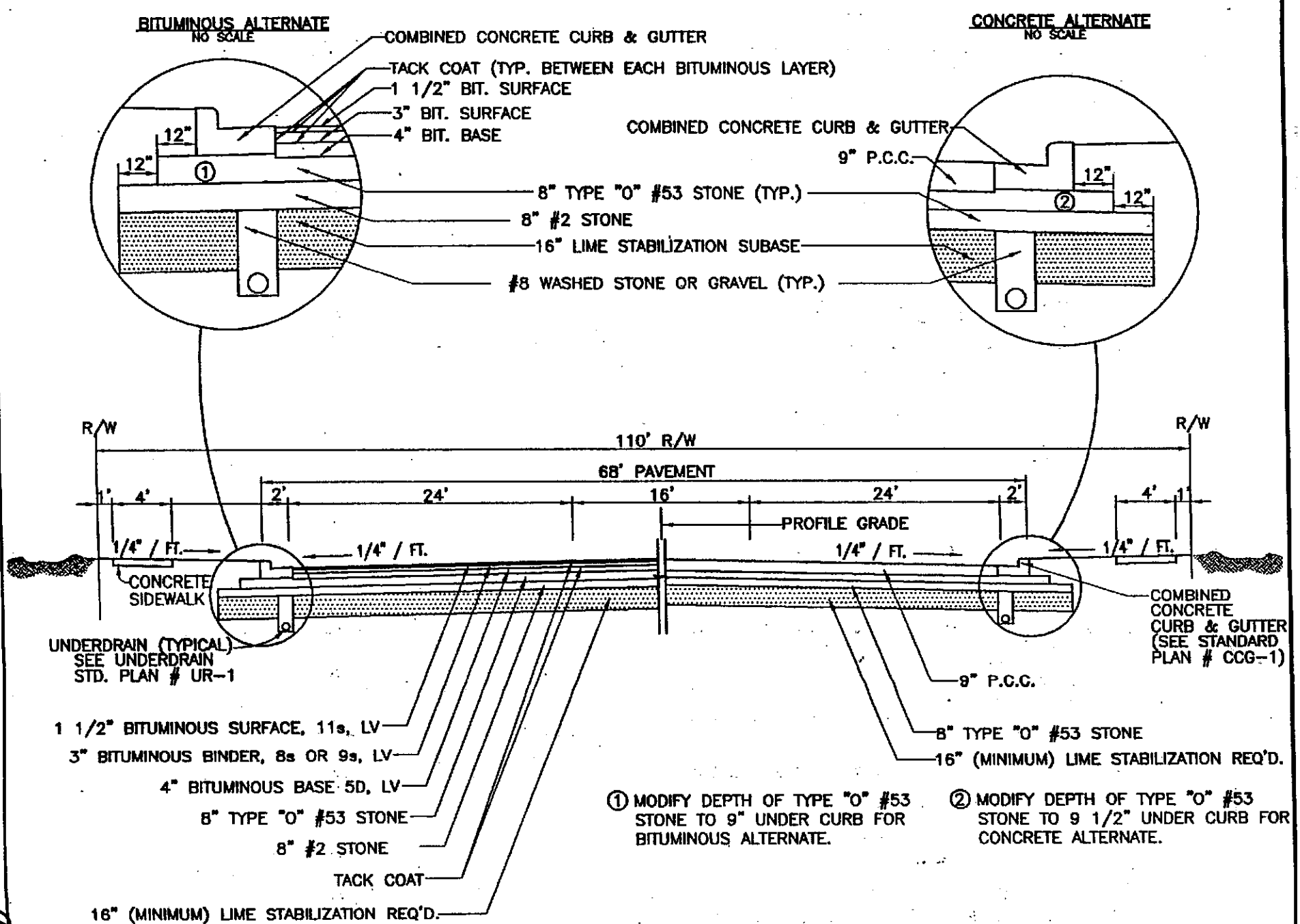

① MODIFY DEPTH OF TYPE "O" #53 STONE TO 9" UNDER CURB FOR BITUMINOUS ALTERNATE.

② MODIFY DEPTH OF TYPE "O" #53 STONE TO 9 1/2" UNDER CURB FOR CONCRETE ALTERNATE.

NOTE: USE WITH INDIANA DEPARTMENT OF TRANSPORTATION, LATEST EDITION, STANDARD SPECIFICATIONS

SCALE: NO SCALE

PROJECTS\CI...NS\9657\9657TS5A.dwg - MAR 14, 1997 - 18:22:09

ACCEPTED BY

BOONE COUNTY HIGHWAY DEPARTMENT

TYPICAL PRIMARY STREET CROSS SECTION FULL DEPTH BITUMINOUS ALTERNATE CURB & GUTTER

STANDARD PLAN NO. TC-5A
SHEET 1 OF 1

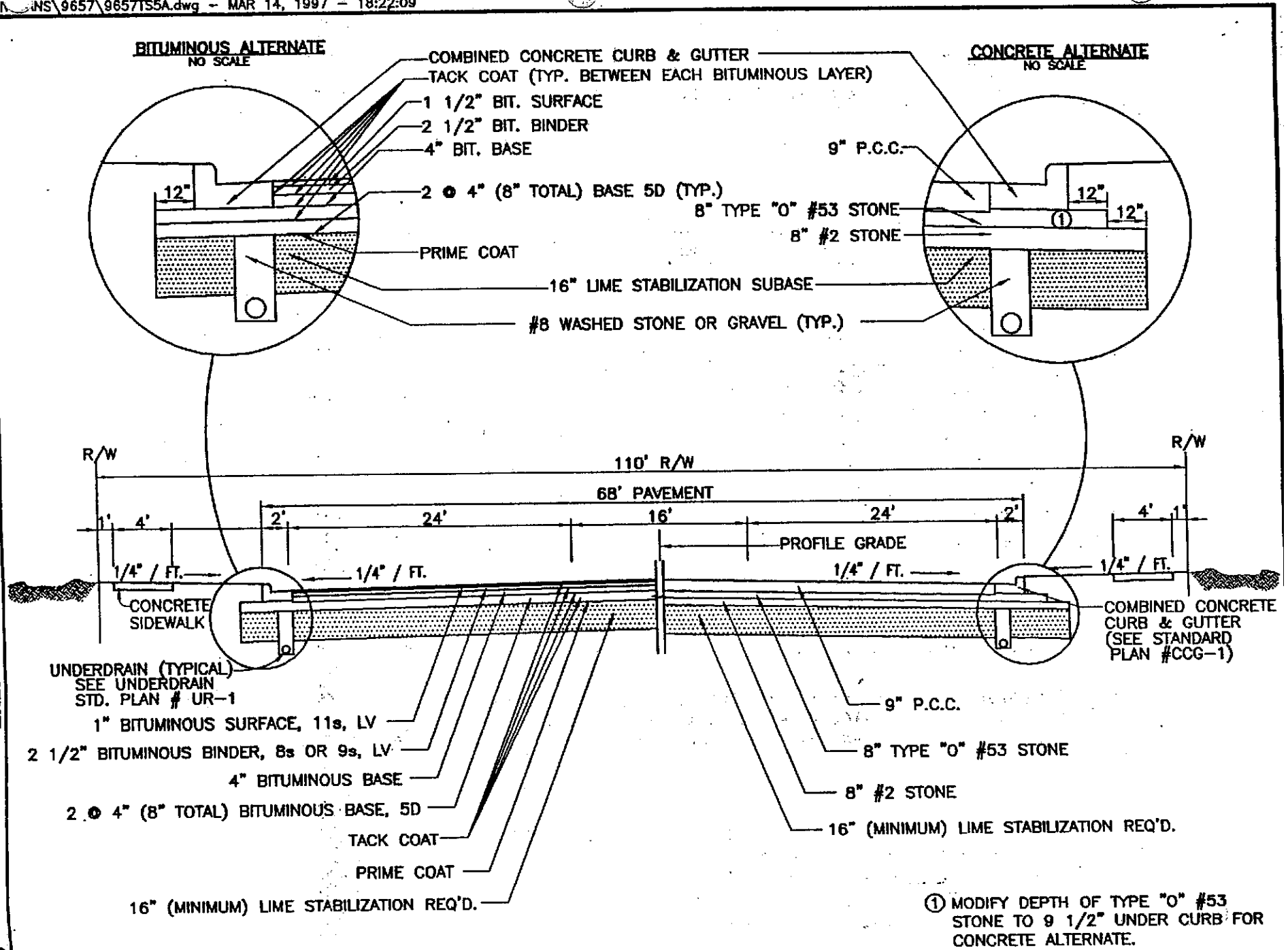

① MODIFY DEPTH OF TYPE "O" #53 STONE TO 9 1/2" UNDER CURB FOR CONCRETE ALTERNATE.

NOTE: USE WITH INDIANA DEPARTMENT OF TRANSPORTATION, LATEST EDITON, STANDARD SPECIFICATIONS

SCALE: NO SCALE